ANSI/SPRI/FM 4435/ES-1 2017

Test Standard for Edge Systems Used with Low Slope Roofing Systems

Approved January 24, 2017

Table of Contents

1.0 Introduction 2
- 1.1 Scope 2
- 1.2 Definitions 2

2.0 Background Information 4
- 2.1 Wind Related Roofing Damage 4

3.0 Membrane Termination 4
- 3.1 Dependently Terminated Systems 4
- 3.2 Independently Terminated Systems 4

4.0 Edge System Resistance 4
- 4.1 Dependently Terminated Systems 4
- 4.2 Edge Flashing, Gravel Stops 4
- 4.3 Copings 5

5.0 Packaging and Identification 5

6.0 Installation Instructions 5

7.0 References 5

Appendix A—Roof Edge System Testing 6

Appendix B—Commentary 12

Copyright by SPRI 2017

465 Waverley Oaks Road
Suite 421
Waltham, MA 02452

www.spri.org.

All Rights Reserved

Disclaimer

This standard is for use by architects, engineers, roofing contractors, manufacturers, testing agencies, and owners of low slope roofing systems. SPRI, its members and employees do not warrant that this standards is proper and applicable under all conditions.

1.0 Introduction

1.1 Scope

This Standard provides the basic requirements only for resistance testing for *roof edge systems* under simulated *wind load* conditions. This Standard is intended for use by those that design, specify, manufacturer, and test roofing materials and *roof edge systems* used in the roofing industry.

This Standard applies to low slope roof systems, with low slope defined here as roofs having a slope ≤9.5 degrees (2:12). The test methods found in this document address *copings* and *roof edge systems*.

1.2 Definitions

All words defined within this section are *italicized* throughout the standard.

ANSI
American National Standards Institute

Ballast
An anchoring material, such as aggregate or precast concrete pavers, which employs its mass and the force of gravity to hold (or assist in holding) single-ply roof *membranes* in place.

Cleat
A continuous *metal* strip, or angled piece, used to secure *metal* components.

Clip
A non-continuous *metal* component or angle piece used to secure two or more *metal* components together.

Coping
The covering piece on top of a *parapet wall* exposed to the weather, usually made of *metal*, and sloped to carry off water.

Deck
The uppermost structural component of the building immediately below the *roof system*. The *deck* must be capable of safely supporting the weight of the *roof system*, and the loads required by the governing building codes.

Design load
The total load on a structural system for the most severe combination of loads and forces which it is designed to sustain.

Drip edge
A *metal* flashing or other overhanging component with an outward projecting lower edge, intended to control the direction of dripping water and help protect underlying building components.

Fascia
The vertical or steeply sloped roof trim located at the perimeter of a building. Typically, it is a border for the *low-slope roof system*.

Fastener
Any of a wide variety of mechanical securement devices and assemblies, including nails, screws, *cleats*, *clips* and bolts, which may be used to secure various *roof edge system* components.

Fastener Pull-out
A type of failure mode in which a *fastener* pulls away from a *substrate* (e.g.: nailer) under load.

Fastener Pull-through
A type of failure mode in which a *fastener* head pulls through a *substrate*, *clip* or *cleat* under load.

Field of Roof Pressure
The wind pressure (generally upwards) imparted on a central area of the roof.

Gravel stop
A flanged device, frequently metallic, designed to prevent loose aggregate from washing off the roof and to provide a continuous *roof edge system* for the roofing *membrane*.

Gutter
A channeled component installed along the down slope perimeter of a roof to convey runoff water from the roof to the drain leaders or downspouts.

Low-slope roof
A category of roofs that generally include weatherproof *membrane* types of *roof systems* installed on slopes at or less than 2:12 (9.5 degrees).

Membrane
A flexible or semi-flexible roof covering or waterproofing whose primary function is to exclude water.

Metal
Any of a category of electropositive elements that usually have a shiny surface, are generally good conductors of heat and electricity, and can be melted or fused, hammered into thin sheets.

Parapet wall
The part of a perimeter wall that extends above the roof.

Roof Edge
The point of transition from a *low-slope roof* to a lower vertical or near vertical building element, including but not limited to walls, windows, *fascia* boards, and mansard roofs.

Roof edge system
A component or system of components at the perimeter of the roof that typically is integrated into the *roof system* for the purpose of flashing and securing the roof *membrane*.

Roof slope
The angle a roof surface makes with the horizontal, expressed as a ratio of the units of vertical rise to the units of horizontal length (sometimes referred to as run), the amount or degree of such deviation. If the slope is given in inches, slope may be expressed as a ratio of rise of run, such as 2:12, or as an angle.

Roof system
A system of interacting roof components, generally consisting of a *membrane*, roof insulation and *roof edge systems* (not including the roof *deck*) designed to weatherproof and, sometimes, to improve the building's thermal resistance.

Soffit
The exposed undersurface of any exterior overhanging section of a roof eave.

Substrate
The upper surface of the roof *deck*, insulation, or other roofing structure upon which a roofing *membrane* or other component of the roofing system is placed or to which it is attached.

Wind load
Force exerted by the wind on a roof or any component of a roof.

2.0 Background Information

2.1 Wind Related Roofing Damage

No area of the country is exempt from wind related roofing damage.

Public law 108-360, National Windstorm Impact Reduction Act of 2004, was signed into law by President Bush to reduce the risk wind hazards propose to life and property. It recommended improvements in and enhancements of, "standards and technologies that will enable cost effective, state of the art windstorm resistant provisions to be adopted as part of state and local building codes"

In addition, public law 114-52, National Windstorm Impact Reduction Act Reauthorization of 2015 2015, reauthorized the national windstorm impact reduction act and noted: SEC. 202. FINDINGS. NOTE: 42 USC 15701.

The Congress finds the following:

1. Hurricanes, tropical storms, tornadoes, and thunderstorms can cause significant loss of life, injury, destruction of property, and economic and social disruption. All States and regions are vulnerable to these hazards.

   A study of 145 FM Global losses involving built-up roof (BUR) systems showed 85 losses (59 percent) occurred because the roof perimeter failed[1]. The Roofing Industry Committee on Weather Issues (RICOWI) has issued several reports summarizing their findings regarding roof damage after significant wind events. The committee found “many examples of damage appeared to originate at failed edge details”[2]. RICOWI notes that their “studies reinforced the need for secure *roof edge systems*, and codes that require secure roof edging need to be enforced”[3].

3.0 Membrane Termination

Two types of *membrane* termination are industry accepted: dependently and independently terminated systems.

3.1 Dependently Terminated Systems

Ballasted systems, ribbon/spot adhered systems, or systems in which the mechanically attached roof cover is secured to the *substrate* at a distance greater than 12 in (300 mm) from the *roof edge* are considered dependently terminated by the *roof edge system*. For these systems the RE-1 and RE-2 tests are required.

3.2 Independently Terminated Systems

Systems in which the roof cover is fully adhered to the *substrate* or a mechanically attached roof cover is secured to the *substrate* at a distance less than or equal to 12 in (300 mm) from the *roof edge* are considered independently terminated. For these systems the RE-2 test or RE-3 test is required.

4.0 Edge System Resistance

Roof edge systems shall be tested in accordance with tests RE-1, RE-2 or RE-3 as appropriate for the application. See Appendix A—Roof Edge System Testing.

4.1 Dependently Terminated Systems

Roof edge systems designed to act as *membrane* termination shall be tested according to tests RE-1 and RE-2.

4.2 Edge Flashing, Gravel Stops

For *roof edge systems* where the **exposed** horizontal component is 4 in (100 mm) or less, the exposed vertical component (face) area shall be tested according to test RE-2. For exposed horizontal components greater than 4 in (100 mm), RE-3 test is required. See RE-2 test for more information.

4.3 Copings

Coping and other *roof edge systems* for which the **exposed** horizontal component exceeds 4 in (100 mm) shall be tested according to test RE-3.

5.0 Packaging and Identification

Roof edge system components or packaging shall contain written documentation, which identifies the components, which have been ES-1 tested. Documentation, in the form of manufacturer's printed product literature or letter, shall be made available to the building owner or his/her representative.

6.0 Installation Instructions

Installation instructions shall be provided for all *roof edge systems* in compliance with the ES-1 test standard, and shall include *fastener* and *cleat* requirements.

7.0 References

1. Factory Mutual Approved Product News Vol. 21, No. 2, 2005
2. Roofing Industry Committee on Weather Issues (RICOWI), *Hurricane Katrina Wind Investigation Report*, 2007, pp. xiv
3. Roofing Industry Committee on Weather Issues (RICOWI), *Hurricanes Charley and Ivan Wind Investigation Report*, 2006, pp.xxiv

Appendix A

Rood Edge System Testing

RE-1 Test

Test Method for Dependently Terminated Roof Membrane Systems

Note: This test is only required for systems described in 3.1, which do NOT contain a mechanical termination (commonly referred to as a “peel stop”) within 12 in (300 mm) of the *roof edge*.

RE1.1 Apparatus

The description of the apparatus is general in nature. Any equipment capable of performing the test procedure within the allowed tolerances shall be permitted. A schematic drawing of this apparatus is shown in Figure RE1.1. The test apparatus shall be constructed so that the performance of individual components are unaffected by end constraints on the test sample. Load shall be applied and measured with calibrated load cells, each accurate to within +/-3% of full scale load cell values. Calibration shall be performed annually (minimum) and should be performed and recorded at 5%, 25%, 50%, and 75% of the expected maximum test values.

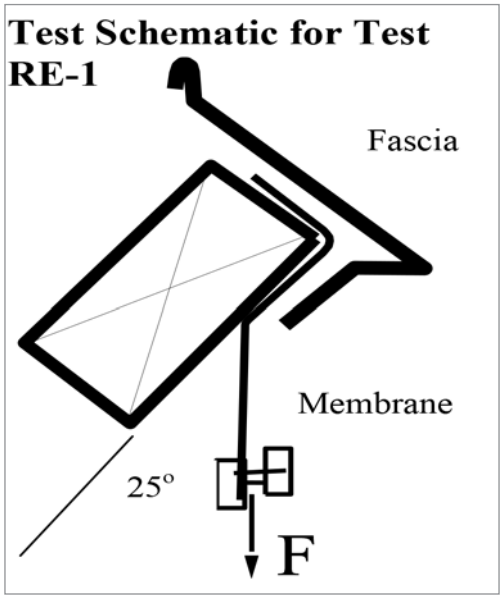

Figure RE1.1

RE1.2 Safety Precautions

Proper precautions shall be taken to protect the operating personnel and observers in case of any failure.

RE1.3 Test Method

To test the *roof edge system’s* ability to restrain a *membrane* force, uniform tension shall be applied along the length of the *membrane* used in the test. The minimum length of the *membrane* and *roof edge system* shall be such that the *roof edge system* sample contains three (3) attachment *fasteners* at the design *fastener* spacing, or is 3 ft 0 in (915 mm) in length, whichever is greater. The *roof edge system* shall be constructed and mounted on the base of a tensile testing device so the *membrane* is pulled at a 25º angle to the roof *deck* to simulate a billowing *membrane* (see Figure RE1.2).

Note that:

Applied Load = F * L

Where:

L = the length of the *roof edge system* sample, use 1 ft (300 mm) to determine the load per linear foot.

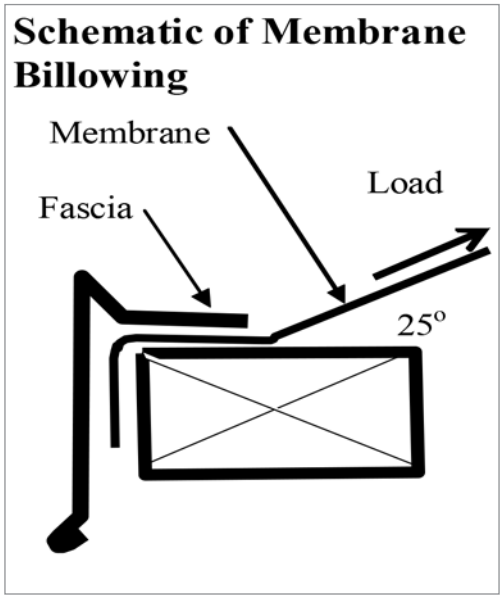

Figure RE1.2

The jaws of the tester shall be connected to two bars that clamp the *membrane* securely between them so that the load is distributed uniformly along the width of the *membrane* (see Commentary for Test RE-1). The tester is loaded at a rate of no less than 2 in/min (50 mm/min) until failure occurs or the desired *membrane* tension load is achieved. Failure is defined as any event that allows the *membrane* to come free of the *roof edge system* or the *roof edge system* to come free of its mount.

RE1.4 Test Results

The results of the test shall be stated in pounds/lineal foot. The results are rounded down to the nearest pound/lineal foot.

RE-2 Test

Test Method for Dependently or Independently Terminated Roof edge systems

(Exposed horizontal component 4 in (100mm) or less)

RE2.1 Apparatus

The description of the apparatus is general in nature. Any equipment capable of performing the test procedure within the allowed tolerances shall be permitted. A schematic drawing of this apparatus is shown in Figure RE2.1. The test apparatus shall be constructed so that the performance of individual components are unaffected by end constraints on the test sample. Load shall be applied and measured with calibrated load cells, each accurate to within +/-3% of full scale load cell values. Calibration shall be performed annually (minimum) and should be performed and recorded at 5%, 25%, 50%, and 75% of the expected maximum test values.

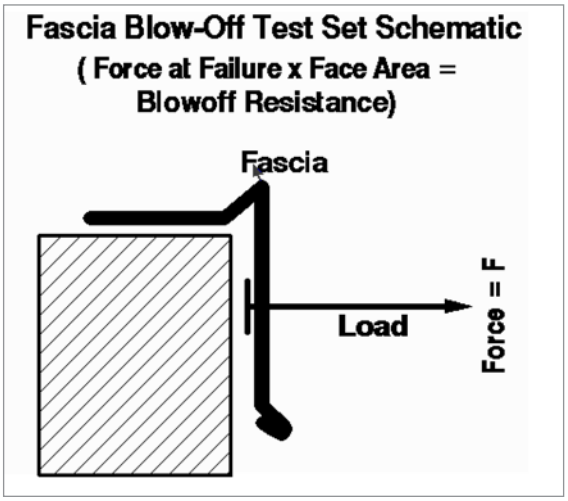

Figure RE2.1

RE2.2 Safety Precautions

Proper precautions shall be taken to protect the operating personnel and observers in case of any failure.

RE2.3 Test Specimens

All parts of the test specimen shall be full size in length, width and all other dimensions, using the same materials, details and methods of construction and anchoring devices (such as *clips*, *cleats*, and *fasteners*) as used on the actual building. Sample length shall be a minimum of 8 ft (2.4 m). When the anchoring means at the ends of the *roof edge system* are normally used to restrain other additional lengths of the *roof edge system*, then the anchoring means shall be modified so that only that percentage that might restrain rotational movement in the test specimen is used.

RE2.4 Procedure

RE2.4.1 Gravity

Any undue influence from gravity that does not occur during actual installation shall be omitted from the test specimen. If the test specimen is inverted, a gravity correction shall be made in the determination of the allowable superimposed loading. Tests run in an inverted position shall include data from pressure reversal or an upright specimen to show that unlatching of the *drip edges* at the *cleats* will not occur in the normal orientation.

RE2.4.2 Loading

Loading shall be applied uniformly on centers no greater than 12 in (300 mm) to the centerline of the vertical face of the *roof edge system*. Loading shall be applied on the horizontal centerline of the face. Loads shall be applied incrementally and held for not less than 60 seconds after stabilization has been achieved at each incremental load. Between incremental loads, the load shall be reduced to zero until the specimen stabilizes (5 minutes maximum). After this stabilization period, initiate the next higher incremental load. Loading to the face of the *roof edge system* shall be applied in **increments** not to exceed 25-lb/ft^2 (120 kg/m^2) until approximately ½ of the expected failure load is obtained. Thereafter, increments of load shall not exceed 10-lb/ft^2 (50-kg/m^2). Loading **speed** shall be such that each incremental load up to and including 150 psf (7.2 kPa) shall be achieved in 60 seconds or less. Above 150 psf (7.2 kPa), incremental loading shall be achieved in 120 seconds or less.

Loading shall proceed as indicated until the test specimen either fails or exceeds the required design pressure. The last 60-second load sustained without failure is the maximum load recorded.

RE2.4.3 Failure

Failure shall be loss of securement of a component of the *roof edge system*.

RE2.4.4 Test Results

The data for the conditions described in 2.4.3 above shall be recorded. If this data is in units of force (pounds), the data shall be converted to pressure by dividing the force by the area of the face:

$$\text{Pressure} = \frac{\text{Outward Force}}{\text{Face Height} \times \text{Face Length}}$$

- Pressure is measured in pounds per square foot
- Force is measured in Pounds Force
- Face Length is the test sample length in feet
- Face Height is in feet (inches÷12)

RE-3 Test for Copings

(Exposed horizontal component exceeds 4 in (100 mm))

RE3.1 Apparatus

This description of the apparatus is general in nature. Any equipment capable of performing the test procedure within the allowed tolerances shall be permitted. A schematic drawing of this apparatus is shown in Figures RE3.1 and RE3.2. The test apparatus shall be constructed so that the performance of individual components are unaffected by end constraints on the test sample. Load shall be applied and measured with calibrated load cells, each accurate to within +/-3% of full scale load cell values. Calibration shall be performed annually (minimum) and should be performed and recorded at 5%, 25%, 50%, and 75% of the expected maximum test values.

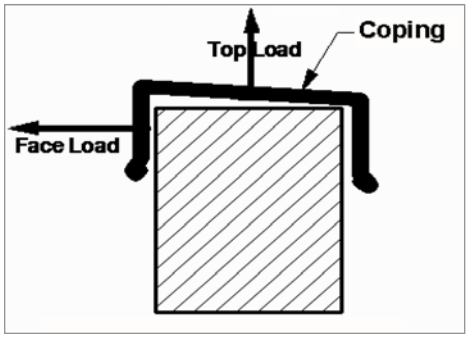

Figure RE-3.1 RE-3 Test–Face Leg Pull

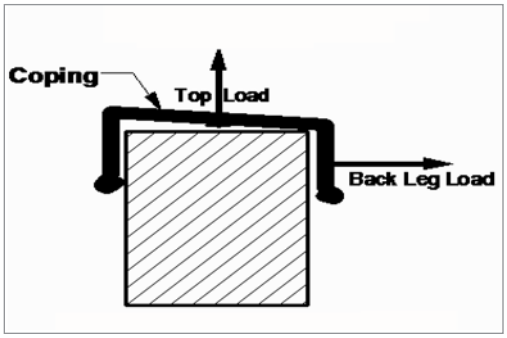

Figure RE-3.2 RE-3 Test–Back Leg Pull

RE3.2 Safety Precautions

Proper precautions shall be taken to protect the operating personnel and observers in case of any failure.

RE3.3 Test Specimens

All parts of the test specimen shall be full size in length, width and all other dimensions, using the same materials, details and methods of construction and anchoring devices (*fasteners*, *clips* and *cleats*) as used on the actual building. Sample length shall be a minimum of 8 ft (2.4 m). When the anchoring means at the ends of the *roof edge system* are normally used to restrain other additional lengths of the *roof edge system*, then the anchoring means shall be modified so that only that percentage that might restrain rotational movement in the test specimen is used. A minimum of 1 face/top test and 1 top/back test shall be performed.

RE3.4 Procedure

RE3.4.1 Gravity

Any undue influence from gravity that does not occur during actual installation shall be omitted from the test specimen. If the test specimen is inverted, a gravity correction shall be made in the determination of the allowable superimposed loading. Tests run in an inverted position shall include data from pressure reversal or an upright specimen to show that unlatching of the *drip edges* at the *cleats* will not occur in the normal orientation.

RE3.4.2 Loading

Top and face loadings shall be applied simultaneously in the vertical and horizontal directions in the ratio of 1.73 lbs/sf top (vertical load) to 1 lb/sf face (horizontal load). Loading shall be applied uniformly on centers no greater than 12 in (300 mm) to the top of the *coping* and to one of the faces of the *coping* at the same time. Loads shall be applied on parallel horizontal centerlines of the surfaces tested.

Loads shall be applied incrementally and held for not less than 60 seconds after stabilization has been achieved at each incremental load. Between incremental loads, the load shall be reduced to zero until the specimen stabilizes (5 minutes maximum), before the next higher incremental load is initiated. Vertical loading to the top of the *roof edge system* shall be applied in **increments** not to exceed 25 lb/ft^2 (120 kg/m^2) until approximately ½ of the expected failure load is obtained. Thereafter, increments of load shall not exceed 10 lb/ft^2 (50 kg/m^2). Loading **speed** shall be such that each incremental load up to and including 150 psf (7.2 kPa) shall be achieved in 60 seconds or less. Above 150 psf (7.2k Pa), incremental loading shall be achieved in 120 seconds or less.

Loading shall proceed as indicated until the test specimen either fails or exceeds the required design pressure. The last 60-second load sustained without failure is the maximum load recorded.

Both face and back legs shall be tested in this manner using separate test samples. Thus, one sample to test the face while loading the top (Figure RE3.1), and the other to test the back leg while loading the top (Figure RE3.2).

RE3.4.3 Failure

Failure shall be loss of securement of a component of the *roof edge system*.

RE3.4.4 Test Results

The data for the conditions described in 3.4.3 above shall be recorded. If this data is units of force (in pounds), it shall be converted to pressure by dividing the force by the area of the face:

$$\text{Pressure} = \frac{\text{Outward Force}}{\text{Face Height} \times \text{Face Length}}$$

- Pressure is measured in pounds per square foot
- Force is measured in Pounds Force
- Face Length is the test sample length in feet
- Face Height is in feet (inches÷12)

Appendix B

Commentary

This Commentary consists of explanatory and supplementary material designed to help designers, roofing contractors, manufacturers, testing facilities, and others in applying the requirements of the preceding Standard.

This Commentary is intended to create an understanding of the requirements through brief explanations of the reasoning employed in arriving at these requirements.

The sections of this Commentary are numbered to correspond to sections of the Standard to which they refer. Since having supplementary material for every section of the Standard is not necessary, not all sections are referenced in this Commentary.

C1.1 Scope

This test Standard was developed for use with Built-Up (BUR), Single-Ply and Modified Bitumen roofing systems.

The low slope value defined in this Standard comes from an industry accepted value of ≤9.5 degrees (2:12).

Roof edge systems serve aesthetic as well as performance functions for a building. Aesthetically, they provide an attractive finish and sometimes even a key feature to the exterior of a building. Of course, no matter how aesthetically pleasing, a *roof edge system* must act primarily as an effective mechanical termination and transition between the roof and other building components such as *parapet walls*, vertical walls, corners, *soffits*, *fascia* boards, etc.

A high performance *roof edge system* provides many benefits. It acts as a water seal at the *roof edge*. When it is the means by which the *membrane* is attached to the building at the *roof edge*, it must also exhibit sufficient holding power to prevent the *membrane* from pulling out at the *roof edge* under design wind conditions. Furthermore, the *roof edge system* itself must not come loose in a design wind. A loose component of a *roof edge system* not only endangers surrounding property or persons, but it also exposes the roofing to blow-off, starting at the *roof edge*.

C2.0 Background Information

The 1980s saw a dramatic increase in the popularity of single-ply *roof systems*. With this increase, *roof edge systems* began receiving additional attention. Throughout the 1980s into the early 1990s a variety of organizations developed *roof edge* termination recommendations and testing criteria. These standards, however, were not universal and each was focused on the specific needs or purpose of that organization. This created a challenge for design professionals in selecting the appropriate *roof edge system*, which would perform to the needs of their particular project.

In 1995 the Single Ply Roofing Industry (SPRI) began the process of developing a consensus *roof edge* performance standard. The goal was to create a standard that would have real-world practicality and provide unified guidance to design professionals as well as those that fabricate and install *roof edge systems*.

In 1998 the American National Standards Institute (*ANSI*) approved what was to become the ANSI/SPRI ES-1 Wind Design Standard for Edge Systems Used with Low Slope Roofing Systems. In 2003 the ES-1 Standard was included in the International Building Code (IBC). 2006 and later versions of IBC all require *roof edge systems* to be tested per the test methods in this standard.

Today, the central role that *roof edge systems* play in protecting against *wind loads* is gaining increasing awareness due to renewed attention of significant wind events.

C3.0 Membrane Termination Systems

The *roof edge system* may be the only restraint preventing a roof blow-off. Mechanically attached *membranes* may be attached only by the *roof edge system* at the building's *roof edge*. In *ballasted* systems, ballast may be scoured away from the *roof edge*. *Ballasted* roofs should be designed to meet ANSI/SPRI RP-4, *Wind Design Standard for Ballasted Single-Ply Roofing Systems*, to prevent excessive scour.

Consideration should be given to sealing the *roof edge* against air infiltration. Air infiltration may affect the loads on the roofing and the *roof edge system* by adding a positive pressure under the roofing, thus compounding the effect of negative pressure above the roofing.

BUR and most modified bitumen *membranes* are fully adhered to roof *deck* or insulation. When they are mechanically attached they shall follow the rules for all mechanically attached systems.

C3.1 Dependently terminated

Ballasted Systems or systems in which the mechanically attached roof cover is secured to the *substrate* at a distance greater than 12 in (300 mm) from the *roof edge system* are considered dependently terminated by the *roof edge system*. For these systems Test RE-1 is applicable. Dependently Terminated *roof edge systems* are often called Edge Flashings or *Gravel Stops*. These products or designs complete the horizontal *deck* or *membrane* plane at its transition to a vertical wall drop, typically at a 90° angle.

Normally the roofing *membrane* is restrained at the *roof edge* by means of a mechanical gripping of the *membrane* by the *roof edge system* or by a bond between the *membrane* and *roof edge system*.

A *roof edge system* may also function as an air seal, when combined with an air retarder throughout the field of the roof, by preventing air infiltration under the roofing *membrane*. To resist air infiltration, nailers should be sealed to the building with appropriate sealant material. Where multiple courses of nailers are used, these nailer courses should also be sealed to each other. Butt joints should also be sealed.

Termination devices against higher vertical walls inboard of the *roof edge* are not considered by this Standard.

C3.2 Independently terminated

Systems in which the roof cover is fully adhered to the *substrate* or a mechanically attached roof cover that is secured the *substrate* at a distance less than or equal to 12 in (300 mm) from the roof side of the *roof edge system* are considered independently terminated. For these systems Tests RE-2 or RE-3 are applicable.

Copings/Caps

Copings/Caps are independently terminated systems: These are *roof edge systems* that cover the tops of *parapet walls*, usually with the roofing *membrane* terminated under them.

Gutters

Gutters and other rain-carrying devices are beyond the scope of this Standard. However, the designer should be aware that their securement is important to the proper functioning of the building, and reference ANSI/SPRI GT-1 *Test Standard for Gutter Systems* for the testing of gutter systems.

C 4.0 Edge System Resistance

Roof edge systems may be selected from manufacturers who certify certain minimum performance to meet design requirements, based upon testing. Any *roof edge system* may be used provided that it is tested and certified by an independent testing laboratory to meet the wind design requirements.

The vertical face of an edge flashing (gravel stop) shall be tested according to Test RE-2 and provide a strength that meets or exceeds the required horizontal design pressure. The test shall be applicable to systems with exposed horizontal components less than 4 in (100 mm) as detailed in the RE-2 Test Method; otherwise Test RE-3 is applicable.

The vertical and horizontal faces of *copings* (and like *roof edge systems*) shall be tested according to Test RE-3 and provide a strength that meets or exceeds the **horizontal and vertical pressures** required.

The *roof edge system*, when used for securing dependently terminated roofing systems, shall be tested according to Test RE-1 to provide a strength that meets

or exceeds the calculated *membrane* tension. See RE-1 Classification Tables in Commentary.

See Test Method RE-1, RE-2, and RE-3 for further information.

C5.0 Packaging and Identification

Because IBC requires that *roof edge systems* be tested per ES-1, owners and code officials need documentation packaged with the *roof edge system* to identify that it has been tested. Recognized or certified third party organizations may require additional auditing.

C6.0 Installation Instructions

In order for the *roof edge system* to perform as tested it must be installed in the same manner as the tested *roof edge system*. Installation instructions are required to assure the proper *cleats*, *clips*, *fasteners* and other components are installed in the correct location and at the correct spacing.

Test Method RE-1 Commentary

The *roof edge system* is a key anchor point holding the *membrane* in place. During high-speed wind loading, the *roof system* can create extreme loads on the *roof edge system*.

Referring to Figure RE1.3 for a mechanically attached system, the loading depends upon the distance, r, of the first row of *fasteners* to the edge termination. The overall shape of the *membrane* is based upon previous tests indicating that the *membrane* deformation can be well approximated by a 25 degree angle[4, 5]. Figure RE1.4 shows a closer look at the *membrane* forces.

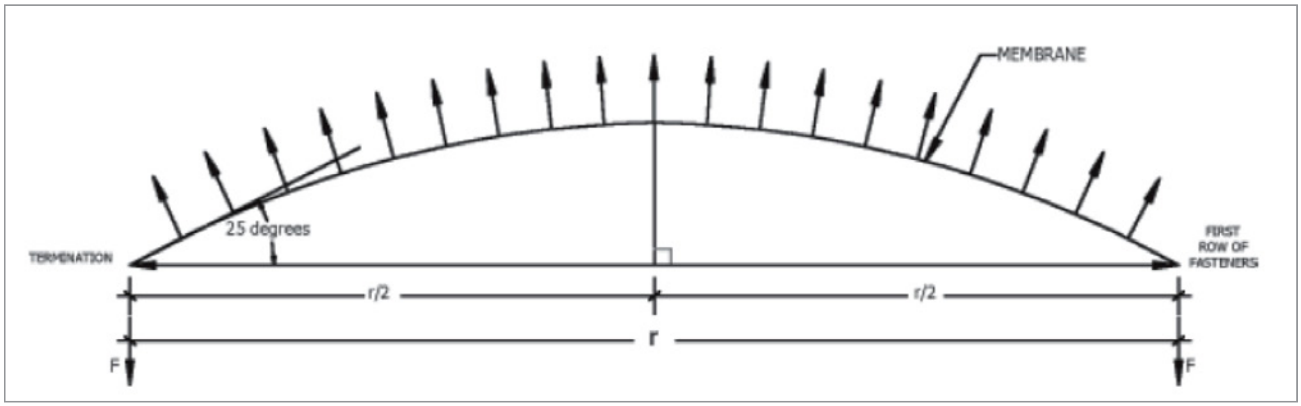

Figure RE1.3—Mechanically Attached Roof Forces

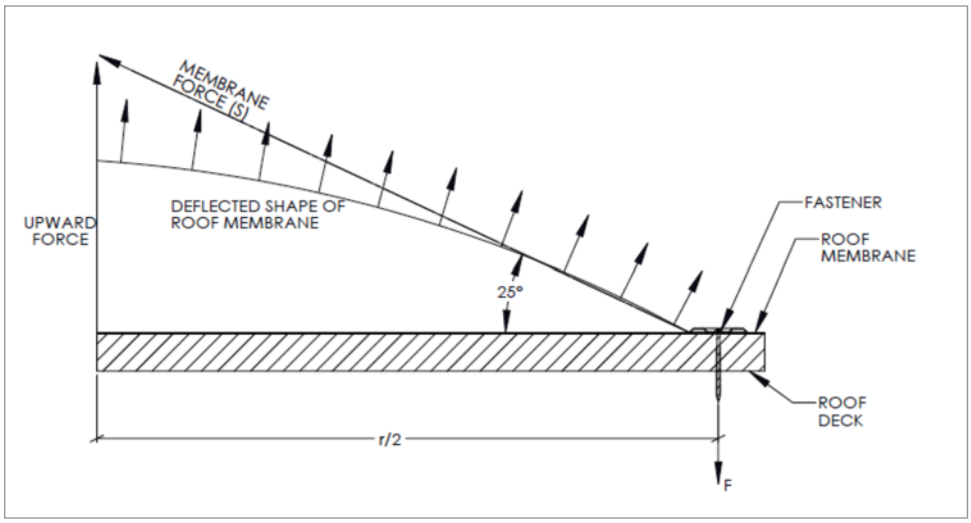

Figure RE1.4—System of Forces, ½ of Membrane width between Fasteners

4 Allen, D.J., and Phalen, T.E., *Stress-Strain Characteristics for EPDM, CSPE, and PVC for the Development of Stresses in Membranes Utilized as Single-Ply Roof Systems*, 1991 International Symposium on Roofing Technology.

5 Garrigus, P.C. The Stress-Strain, Stress-Thickness and Stress-Width Characteristics of Non-Reinforced, Glass Reinforced and Polyester Reinforced PVC Roofing Membrane, Graduate Thesis, NU Student School of Engineering Technology, March 1991.

If an upward pressure (lb/ft^2) is applied to the *membrane*, then the upward force = upward pressure x r/2 for one half of the *membrane* width r (a single *fastener* will have a force, F, to resist this load). Assuming a 25° deflected shape, then the *membrane* force, S, can be found from the equations:

$$\sin 25° = \frac{UpwardForce}{S}$$

$$\sin 25° = \frac{UpwardPressure * \frac{r}{2}}{S}$$

Thus,

$$S = \frac{UpwardPressure * \frac{r}{2}}{\sin 25°}$$

The precision and bias of this test measure has not been determined. In the absence of third party witness testing/verification, the ES-1 committee recommends round robin testing of standard, pre-manufactured edge systems to establish lab-to-lab variability of individual test results.

Test Method RE-1 Commentary—Fully Adhered Roof Systems

Fully adhered systems are assumed to apply no stress on the *roof edge system* under consideration, unless either the *metal* is loosened or the *membrane* is in peel from the pressure differential between the exterior and interior of the system; however, recent hurricane investigations have shown that both can occur.

Test Method RE-1 Commentary—Membrane Tension

The following tables are provided as a reference, when testing according to RE-1, for approximating *membrane* tension based upon the calculated Field of Roof or Vertical Perimeter Pressure, and the distance to the first row of *fasteners* in a mechanically attached system. For *ballasted* system 5 < r ≤ 6 is used. These tables are not intended to be used for design. *Design load* should be determined as required by the Authority Having Jurisdiction.

RE-1 Classifications—Dependently Terminated Systems

Occupancy Category II (Importance Factor, I=1.0)[1]

For *h* ≤ *60* feet, Enclosed Buildings

Field of Roof Pressure q_{fz} psf (kPa)	Vertical Perimeter Pressure P_{vp} psf (kPa)	Membrane Tension lb/ft (kg/m Distance to first Row of Fasteners ft (m)				
		1< r ≤ 2 (0.3< r ≤0.6)	2< r ≤ 3 (0.6< r ≤ 0.9)	3< r ≤ 4 (0.9< r ≤1.2)	4< r ≤ 5 (1.2< r ≤0.5)	(note 2) 5< r ≤ 6 (1.5< r ≤1.8)
q_{fz} ≤ 30.0 (q_{fz} ≤ 1.44)	101 (4.83)	239 (356)	358 (533)	477 (710)	596 (887)	716 (1066)
30.0< q_{fz} ≤37.5 (1.44< q_{fz} ≤1.8)	126 (6.03)	298 (443)	447 (664)	5 (887)	745 (1109)	894 (1330)
37.5< q_{fz} ≤45.0 (1.8< q_{fz} ≤2.15)	151 (7.24)	358 (533)	537 (799)	716 (1066)	894 (1330)	1073 (1597)
45.0< q_{fz} ≤52.5 (2.15< q_{fz} ≤2.51)	176 (8.45)	417 (21)	62 (932)	835 (1243)	1042 (1552)	11 (1863)
52.5< q_{fz} ≤60.0 (2.51<q_{fz} ≤2.87)	202 (9.65)	477 (710)	716 (1066)	954 (1419)	1193 (1775)	1431 (2130)
60.0< q_{fz} ≤67.5 (2.87< q_{fz} ≤3.23)	227 (10.9)	537 (799)	84 (1198)	107 (1597)	1342 (1997)	1610 (2395)
67.5< q_{fz} ≤75.0 (3.23< q_{fz}≤3.59)	252 (12.1)	596 (887)	894 (1330)	1193 (1775)	1490 (2218)	1789 (2661)
75.0< qfz ≤82.5 (3.59< q_{fz}≤3.95)	277 (13.3)	656 (976)	984 (1464)	1312 (191)	1640 (244)	1968 (2928)
82.5< q_{fz} ≤90.0 (3.95< q_{fz}≤4.31)	302 (14.5)	716 (1066)	1073 (1597)	1431 (2130)	1789 (2661)	2146 (3194)
90.0< q_{fz} ≤97.5 (4.31< q_{fz}≤4.67)	328 (15.7)	775 (1152)	1163 (1731)	1550 (2307)	1937 (2884)	2326 (3460)
97.5< q_{fz} ≤105.0 (4.67< q_{fz}≤5.03)	353 (16.9)	83 (1243)	1251 (1863)	1669 (2484)	2087 (3106)	2504 (3725)
105< q_{fz} ≤112.5 (5.03< q_{fz} ≤5.39)	378 (18.1)	894 (1330)	1342 (1997)	1789 (2661)	2236 (3328)	2683 (3992)
112.5< q_{fz} ≤120 (5.39< q_{fz}≤5.75)	403 (19.3)	954 (1419)	1431 (2130)	1907 (2839)	2384 (3548)	2861 (4258)
120< q_{fz} ≤127.5 (5.75< q_{fz}≤6.11)	428 (20.5)	1013 (1509)	1521 (2263)	2027 (3016)	2534 (3770)	3040 (4525)

Table Notes:

1. I = 1 so this table is also applicable when no importance factor is required. Adjust for other I values.
2. 5< r ≤ 6 column to be used for *ballasted* systems. See Appendix A–RE-1 test information.

RE-1 Classifications—Dependently Terminated Systems

Occupancy Category II (Importance Factor I=1.0)[1]

For h > 60 feet, Enclosed Buildings

Field of Roof Pressure q_{fz} psf (kPa)	Vertical Perimeter Pressure P_{vp} psf (kPa)	Membrane Tension lb/ft (kg/m Distance to first Row of Fasteners ft				
		1< r ≤ 2 (0.3< r ≤0.6)	2< r ≤ 3 (0.6< r ≤ 0.9)	3< r ≤ 4 (0.9< r ≤1.2)	4< r ≤ 5 (1.2< r ≤0.5)	(note 2) 5< r ≤ 6 (1.5< r ≤1.8)
q_{fz} ≤ 30.0 (q_{fz} ≤ 1.44)	94 (4.51)	224 (333)	336 (498)	446 (664)	559 (830)	670 (997)
30.0< q_{fz} ≤37.5 (1.44< q_{fz} ≤1.8)	118 (5.64)	278 (415)	41 622)	559 (830)	698 (1037)	836 (1245)
37.5< q_{fz} ≤45.0 (1.8< q_{fz} ≤2.15)	141 (6.77)	336 (498)	502 (747)	670 (997)	836 (1245)	1004 (1494)
45.0< q_{fz} ≤52.5 (2.15< q_{fz} ≤2.51)	165 (7.89)	390 (581)	586 (873)	782 (1163)	975 142)	1171 (1742)
52.5< q_{fz} ≤60.0 (2.51<q_{fz} ≤2.87)	188 (9.02)	446 (664)	670 (997)	893 (1329)	1116 (1661)	1339 (1993)
60.0< q_{fz} ≤67.5 (2.87< q_{fz} ≤3.23)	212 (10.2)	502 (747)	752 (1121)	1004 (1494)	1255 (1869)	1506 (2242)
67.5< q_{fz} ≤75.0 (3.23< q_{fz}≤3.59)	236 (11.3)	559 (830)	836 (1245)	1116 (1661)	1395 (2075)	1674 (2491)
75.0< qfz ≤82.5 (3.59< q_{fz}≤3.95)	259 (12.4)	613 (914)	920 (1370)	1229 (1827)	1535 (2283)	1842 (2740)
82.5< q_{fz} ≤90.0 (3.95< q_{fz}≤4.31)	283 (13.5)	670 (997)	1004 (1494)	1339 (1993)	1674 (2491)	2008 (2989)
90.0< q_{fz} ≤97.5 (4.31< q_{fz}≤4.67)	306 (14.7)	725 (1078)	1088 (1620)	1451 (2159)	1813 (2698)	2176 (3238)
97.5< q_{fz} ≤105.0 (4.67< q_{fz}≤5.03)	330 (15.8)	78 (1163)	1171 (1742)	1562 (2325)	953 (2907)	2343 (3487)
105< q_{fz} ≤112.5 (5.03< q_{fz} ≤5.39)	353 (16.9)	836 (1245)	1255 (1869)	1674 (2491)	2093 (3114)	2511 (3735)
112.5< q_{fz} ≤120 (5.39< q_{fz}≤5.75)	377 (18.0)	893 (1329)	339 (1993)	1785 (2656)	2231 (3320)	28 (3985)
120< q_{fz} ≤127.5 (5.75< q_{fz}≤6.11)	400 (19.2)	948 (1412)	1424 (2118)	1896 (2823)	2371 (3528)	2846 (4235)

Table Notes:

1. I = 1 so this table is also applicable when no importance factor is required. Adjust for other I values.
2. 5< r ≤ 6 column to be used for *ballasted* systems. See Appendix A–RE-1 test information.

Test Methods RE-2 and RE-3 Commentary

Stabilization

Stabilization is necessary during loading to ensure that the specimen has reached equilibrium before considering a sustained load for a period of 60 seconds. As the specimen approaches its ultimate capacity, stabilization of the specimen will generally take longer to achieve.

Loading

These test methods consist of applying loads on surfaces of a test specimen and observing deformations and the nature of any failures of principal or critical elements of the *roof edge systems*. Loads are applied to simulate the static wind loading of the members. Test RE-2 requires horizontal loading on only the vertical face since the upward wind loading on an edge system member is considered to be negligible because of the small area exposed to uplift.

A recovery period between increases in incremental loading is allowed for the test specimen to attempt to assume its original shape prior to applying the next load level. The rate of sustained loading can be a critical issue when specimens are subjected to continuously increasing load until failure is achieved. Loading rate has little meaning in RE-2 and RE-3 because these methods employ incrementally increased loads sustained for long times followed by brief recovery periods. An incremental method is more stringent than continuous loading due to the requirement of a 60 second holding load.

The RE-2 and RE-3 Test procedures require full-length specimens because end conditions of discreet sections of *copings* and edge flashings can play a profound role in the failure mode of the materials. Furthermore, those products having *clips* (not continuous *cleats*) can exhibit different performance under testing than in the field if the *clips* do not act upon the products as they would in the field.

No special testing is required of fabricated miters. However, the *roof edge system* from which the miter has been fabricated shall have been tested to meet the calculated design loads of the corner region. The precision and bias of these test measures have not been determined. In the absence of third party witness testing/verification, the ES-1 committee recommends round robin testing of standard, pre-manufactured *roof edge systems* to establish lab-to-lab variability of individual test results.

The external Pressure Coefficients (GCp) used to calculate horizontal and vertical pressures vary by building height (<60 or >60') and location on the roof (perimeter or corner region). The ratio of top (vertical) pressure to face (horizontal) pressure ranges from 1.71 to 2.30 depending on the building height and roof location. To simplify testing and avoid having to test *roof edge systems* at four different pressure ratios, the ratio for testing has been set at 1.73. This 1:73 ratio is deemed to be the most conservative as greater loads are applied to the face and back of the *coping* where failure most often occurs. 1.73 is also the ratio typically was used when testing per ANSI/SPRI ES-1 2003 and ANSI/SPRI/FM 4435/ES-1 2011; therefore, products tested in accordance with one of those previous versions should not require re-testing.

Failure

Some examples of component failure that will not enable the *roof edge system* to perform as designed would be:

- Full *fastener pull-out*
- *Fastener pull-through*
- Collapse of a *cleat*, *fascia* or cover
- Disengagement of cover from a *cleat* or *clip*

Consideration should be given to permanent deformation observed during testing. A *roof edge system* with no load being applied, which exhibits permanent deformation from its original shape, may allow water infiltration and be subjected to peeling wind forces that could compromise the intended performance of the *roof edge system*.

Test Method RE-2 and RE-3 Commentary
Horizontal and Vertical Edge Pressures

The following tables are provided as a reference, when testing according to RE-2 and RE-3, for approximating the Horizontal and Vertical Loads at the perimeter and corner based upon the calculated Field of Roof pressure. These tables are not intended to be used for design. *Design load* should be determined as required by the Authority Having Jurisdiction.

Horizontal and Vertical Edge Pressures
Enclosed Buildings
Occupancy Category II (I=1.0)[1]
h≤ 60 feet

Field of Roof Pressure q_{fz} psf (kPa)	Horizontal Load psf (kPa)		Vertical Load psf (kPa)	
	Perimeter P_{hp}	Corner P_{hc}	Perimeter P_{hp}	Corner P_{hc}
30 (1.44)	58 (2.8)	73 (3.5)	101 (4.8)	152 (7.3)
37.5 (1.80)	73 (3.5)	91 (4.3)	126 (6.0)	190 (9.1)
45 (2.15)	87 (4.2)	109 (5.2)	151 (7.2)	228 (10.9)
52.5 (2.51)	102 (4.9)	127 (6.1)	176 (8.4)	266 (12.7)
60 (2.87)	116 (5.6)	145 (7.0)	202 (9.7)	304 (14.5)
67.5 (3.23)	131 (6.3)	163 (7.8)	227 (10.9)	342 (16.4)
75 (3.59)	146 (7.0)	182 (8.7)	252 (12.1)	380 (18.2)
82.5 (3.95)	160 (7.7)	200 (9.6)	277 (13.3)	417 (20.0)
90 (4.31)	175 (8.4)	218 (10.4)	302 (14.5)	455 (21.8)
97.5 (4.67)	189 (9.1)	236 (11.3)	328 (15.7)	493 (23.6)
×	1.94* ×	2.41* ×	3.36* ×	5.06* ×

Table Notes:

1. I = 1 so this table is also applicable when no importance factor is required. Adjust for other I values as required.
2. Horizontal and vertical load values are calculated directly using field of roof pressure given in column 1
3. Horizontal and vertical load values are calculated using External Pressure Coefficients (GC_p) of 0.97 horizontal perimeter, 1.21 horizontal corner, 1.68 vertical perimeter, and 2.53 vertical corner.
4. Horizontal and vertical load values contain a safety factor of 2.0.

Horizontal and Vertical Edge Pressures
Enclosed Buildings
Occupancy Category II (I=1.0)[1]
h≤ 60 feet

Field of Roof Pressure q_{fz} psf (kPa)	Horizontal Load psf (kPa)		Vertical Load psf (kPa)	
	Perimeter P_{hp}	Corner P_{hc}	Perimeter P_{hp}	Corner P_{hc}
30 (1.44)	41 (2.0)	75 (3.6)	94 (4.5)	128 (6.1)
37.5 (1.80)	51 (2.4)	94 (4.5)	118 (5.6)	161 (7.7)
45 (2.15)	61 (2.9)	113 (5.4)	141 (6.8)	193 (9.2)
52.5 (2.51)	71 (3.4)	131 (6.3)	165 (7.9)	225 (10.8)
60 (2.87)	82 (3.9)	150 (7.2)	188 (9.0)	257 (12.3)
67.5 (3.23)	92 (4.4)	169 (8.1)	212 (10.1)	289 (13.8)
75 (3.95)	102 (4.9)	188 (9.0)	236 (11.3)	321 (15.4)
82.5 (3.95)	112 (5.4)	206 (9.9)	259 (12.4)	353 (16.9)
90 (4.31)	122 (5.9)	225 (10.8)	283 (13.5)	385 (18.4)
97.5 (4.67)	133 (6.3)	244 (11.7)	306 (14.7)	417 (20.0)
105 (5.03)	143 (6.8)	263 (12.6)	330 (15.8)	449 (21.5)
112.5 (5.39)	153 (7.3)	281 (13.5)	353 (16.9)	482 (23.1)
120 (5.75)	163 (7.8)	300 (14.4)	377 (18.0)	514 (24.6)
127.5 (6.10)	173 (8.3)	319 (15.3)	400 (19.2)	546 (26.1)
×	1.36* ×	2.5* ×	3.14* ×	3.28* ×

Table Notes:

1. I = 1 so this table is also applicable when no importance factor is required. Adjust for other I values as required.
2. Horizontal and vertical load values are calculated directly using field of roof pressure given in column 1
3. Horizontal and vertical load values are calculated using External Pressure Coefficients (GCp) of 0.97 horizontal perimeter, 1.21 horizontal corner, 1.68 vertical perimeter, and 2.53 vertical corner.
4. Horizontal and vertical load values contain a safety factor of 2.0.